comer industries
driveshafts

End fittings		Max. torque
Tractor	Cod: C02	–
Implement	Cod: RB2	2500 Nm – 22140 in.lb.

Notes:

CE CERTIFIED

Warning !
Sections of driveline marked ⚠ are not shielded and must be shielded by an interactive guarding system.
COMER spa. declines responsibility if proper guards are not provided or maintained.

Features

Series:	V
Type:	60
Code and description:	98611510EN00500400
Customer's code:	–
Colour:	Yellow

Last drawing

Index: – Date: –

Application

–

Driveline data

X	1 3/8" Z6 DIN 9611
Y	1 3/8" Z6 DIN 9611
E	1350–53.15"
I	1365–53.74"
P	1280–50.39"

Overlap

	Steel tubes	Guard
Max.	1317–51.85"	1260–49.61"
Min.	439–17.28"	382–15.04"

Greasing point

1)	–
2)	–

The dimensioning is cross to cross

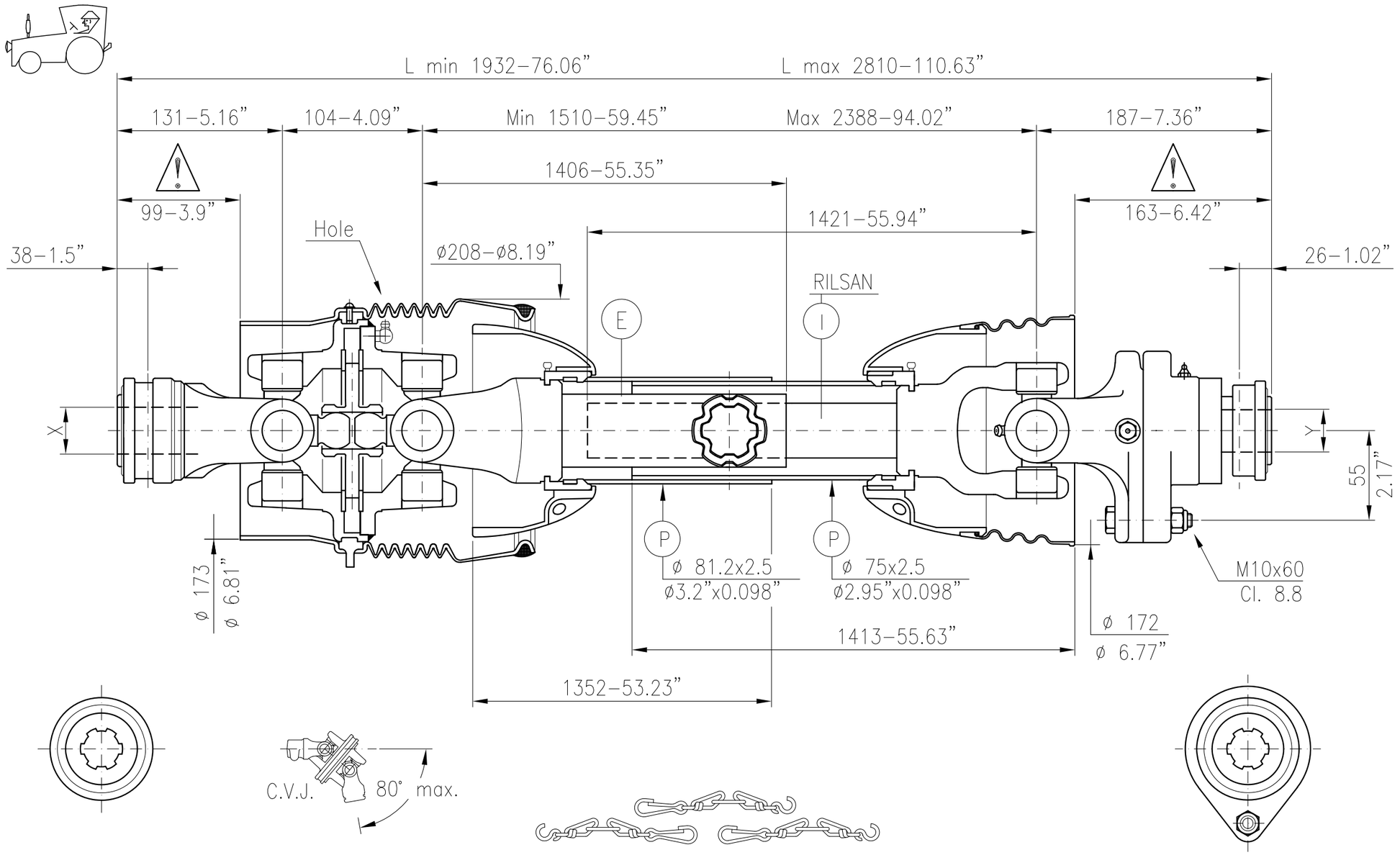

Cross and tubes

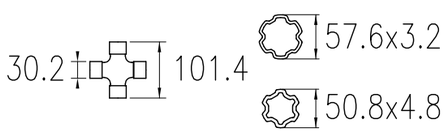

Data 540 r.p.m.				Data 1000 r.p.m.				1100 min.$^{-1}$ r.p.m. max.
KW	CV	Nm.	in.lb.	KW	CV	Nm.	in.lb.	
50	68	880	7790	77	105	740	6510	

Continuous operation data and conditions,working angle 5°, average life 1000 hours

Data for only critical velocity	
540 r.p.m.	1000 r.p.m.
Max. 2388–94.02"	Max. 1950–76.77"
L max. 2810–110.63"	L max. 2372–93.38"
Checked:	Signed by: F.L.

Customer:

– –

Date: 22–09–09